Baby Vox Mod

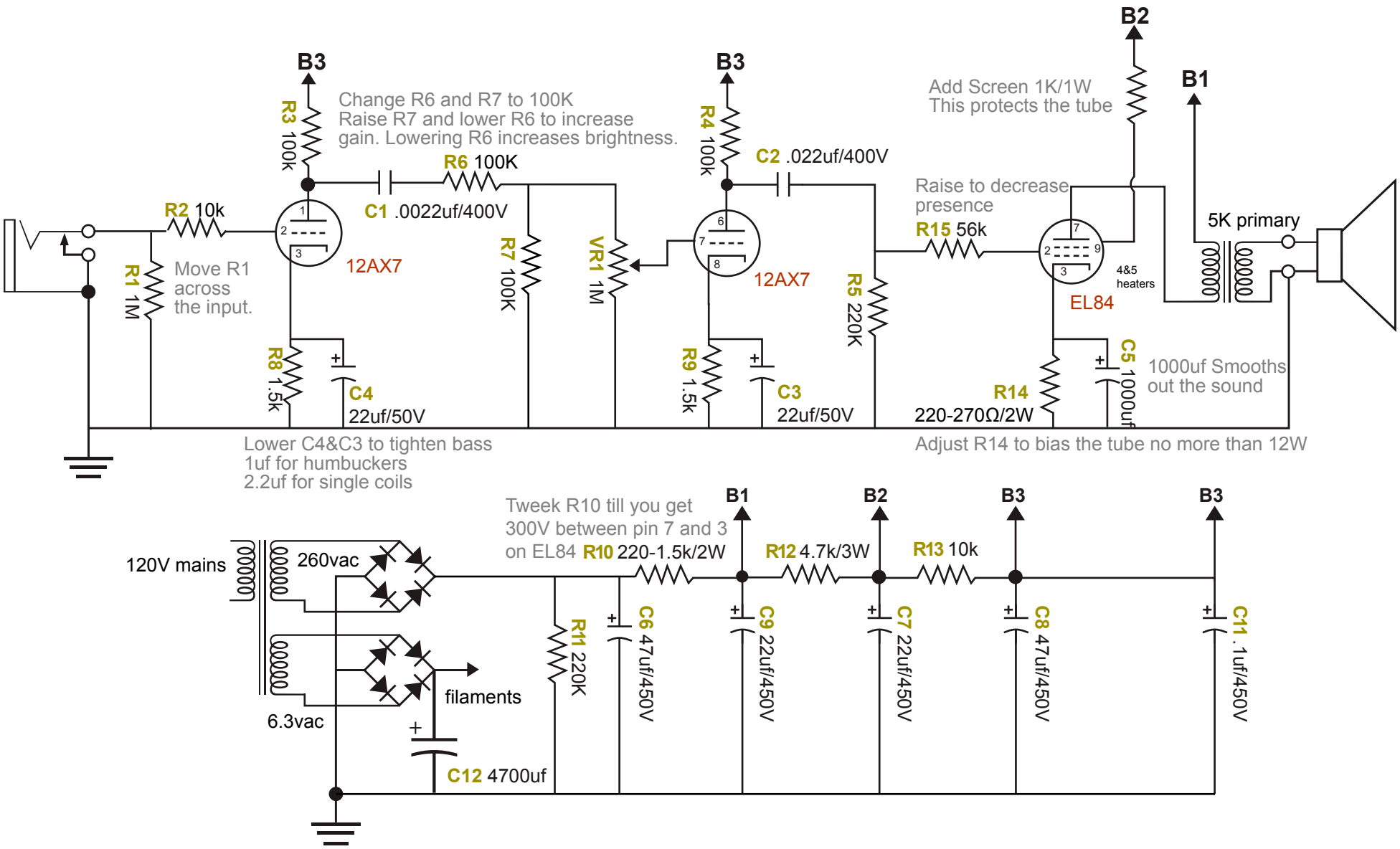
B3
R3 100k
Change R6 and R7 to 100K
Raise R7 and lower R6 to increase
gain. Lowering R6 increases brightness.
R6 100K
C1 .0022uf/400V
R2 10k
R1 1M
Move R1
across
the input.
12AX7
R7 100K
VR1 1M
R8 1.5k
C4
22uf/50V
B3
R4 100k
C2 .022uf/400V
12AX7
R9 1.5k
C3
22uf/50V
R5 220K
B2
Add Screen 1K/1W
This protects the tube
B1
Raise to decrease
presence
R15 56k
4&5
heaters
EL84
5K primary
R14
220-270Ω/2W
C5 1000uf
1000uf Smooths
out the sound
Lower C4&C3 to tighten bass
1uf for humbuckers
2.2uf for single coils
Adjust R14 to bias the tube no more than 12W
Tweek R10 till you get
300V between pin 7 and 3
on EL84 R10 220-1.5k/2W
B1
B2
B3
B3
R12 4.7k/3W
R13 10k
120V mains
260vac
6.3vac
filaments
C12 4700uf
R11 220K
C6 47uf/450V
C9 22uf/450V
C7 22uf/450V
C8 47uf/450V
C11 .1uf/450V