VVR Mod
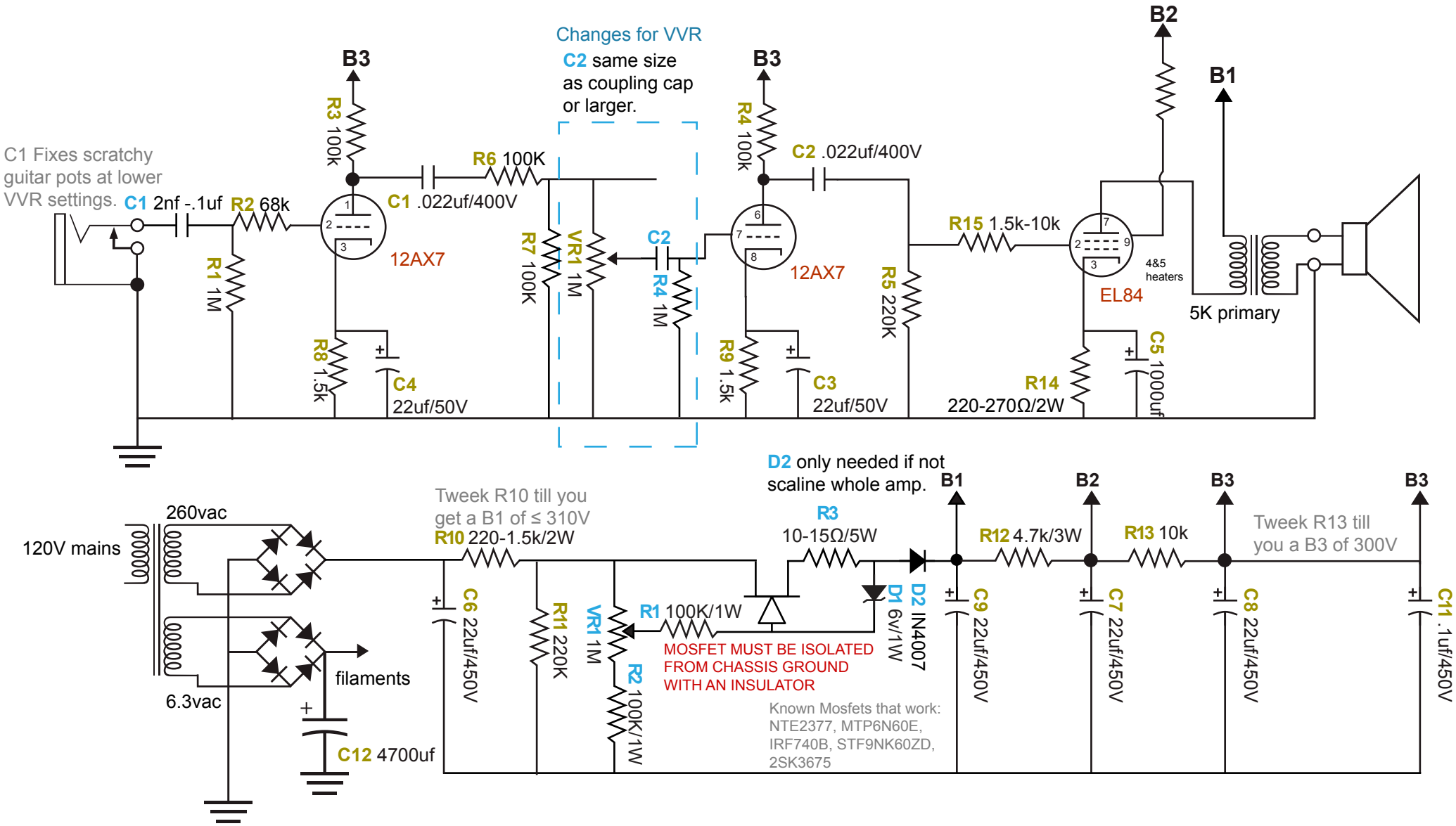
VVR based on Dana\UR12 circuit.